MARTIN 500 SERIES
3-10 HORSEPOWER BRASS PUMP
OWNER'S MANUAL

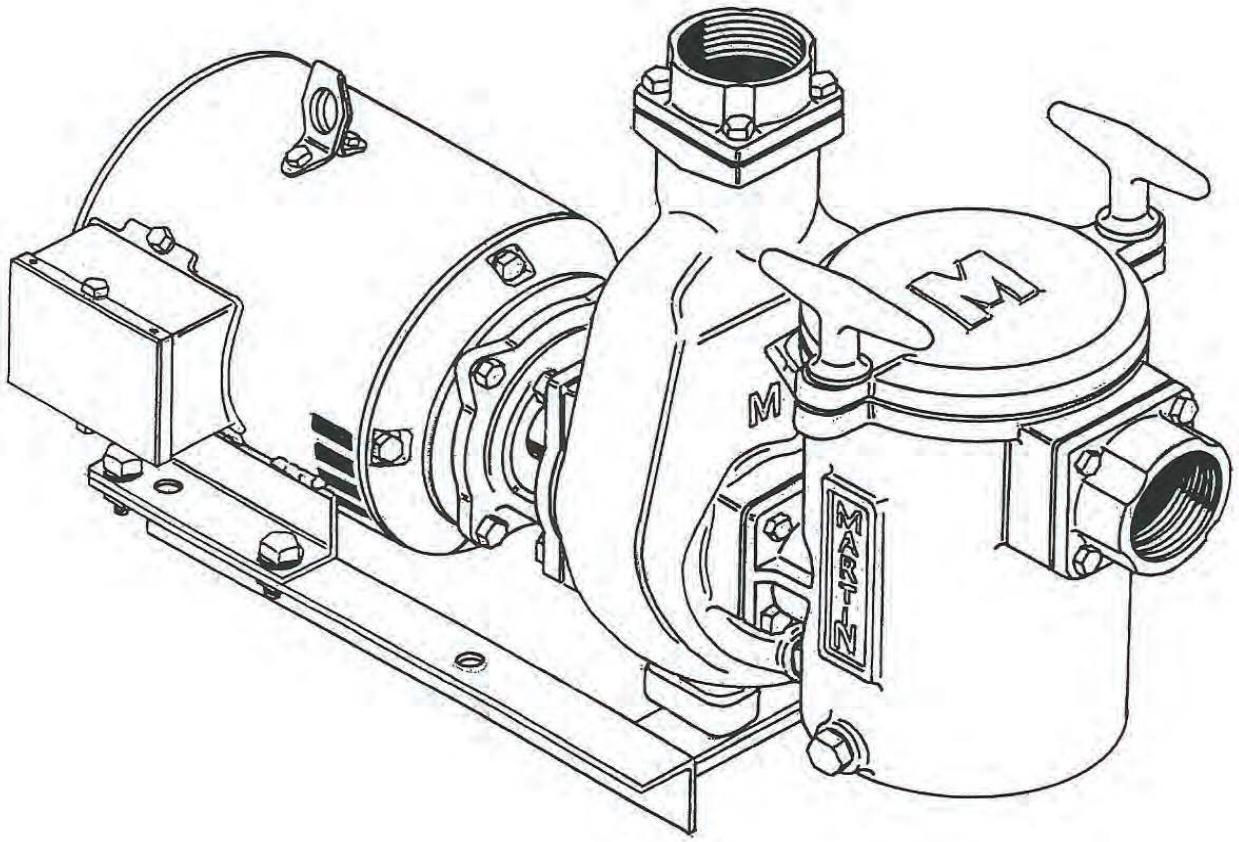

VAL-PAK

MARTIN 500 TABLE OF CONTENTS

MARTIN 500 SERIES BRONZE PUMP

Introducing a revolutionary new pump guaranteed virtually maintenance-free and easy to install!

The Martin 500 Series Bronze pump is produced from a special bronze alloy. This pump is designed for pools, spas, and fountains.

The Martin 500 Series pump is equipped with an 8" trap and a stainless steel basket to capture debris. The trap allows the pump's self-priming feature to operate. The 500 Series Pump design maximizes:

- ***performance***
- ***durability***
- ***resistance to chemicals***
- ***resistance to corrosion***
- ***reliability***
- ***flow rate***
- ***quiet operation***

LIQUID END PUMP AND MOTOR CAN BE SOLD SEPARATELY!

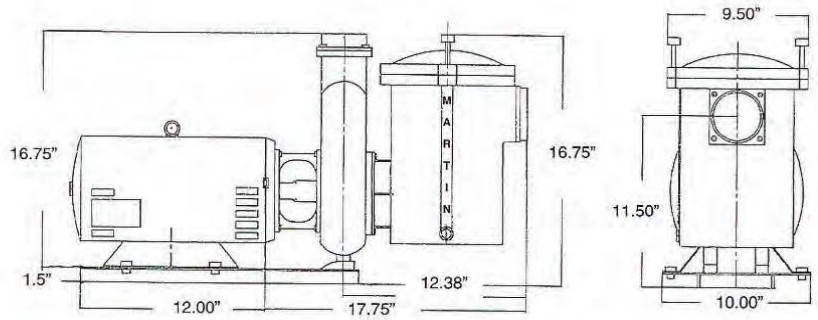

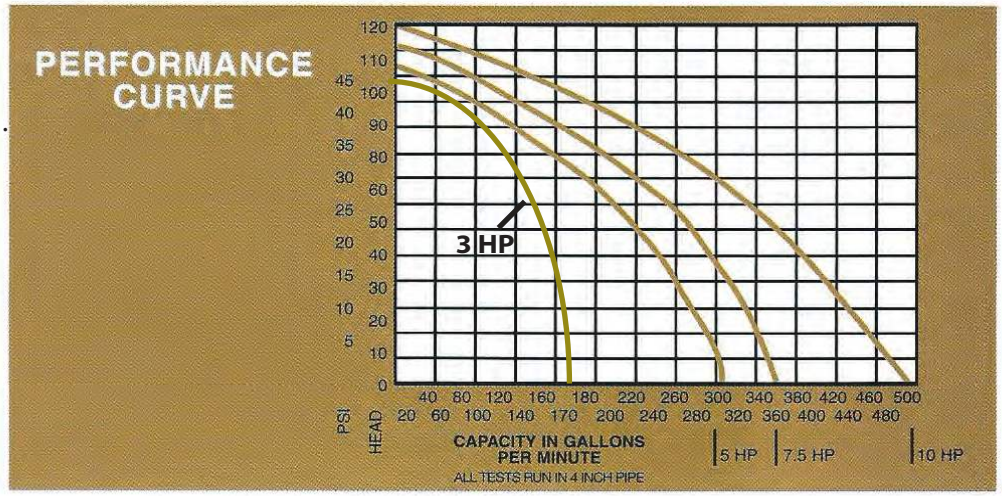

Pump, UL listed motor and pump stand				
Model Number	**HP**	**Inlet**	**Outlet**	**Voltage**
MB-5005	5	3″	3″	208-230/460/3ph/60HZ
MB-5007	7.5	3″	3″	208-230/460/3ph/60HZ
MB-50010	10	3″	3″	208-230/460/3ph/60HZ

*50 HZ and other voltages available on request

MOTOR FEATURES

- **Self-Priming Design**
  for quiet, dependable performance
- **T-Handles**
  for easy strainer cover removal
- **Mechanical Seal**
  self-lubricating carbon/ceramic designed for long life
- **Cycle/Phase/Voltages**
  available as special order
- **Electric Motor**
  nationally known brand for continuous heavy-duty operation
- **Deep Volute**
  for maximum hydraulic performance
- **Open Face Impeller**
  non-clogging and self-cleaning
- **Oversized Strainer pot**
  large capacity S/S basket for longer cleaning intervals
- **Flanged Ports**
  3" intake and 3" discharge with NPT pipe connection allowing pump removal without disturbing plumbing.

VAL-PAK

20731 Centre Pointe Pkwy
Santa Clarita, CA 91350
Phone: 1-800-798-5123
Fax: 1-661-252-0117
Info@Val-PakProducts.com

MARTIN 500 SERIES
3-10 HORSEPOWER BRASS PUMP

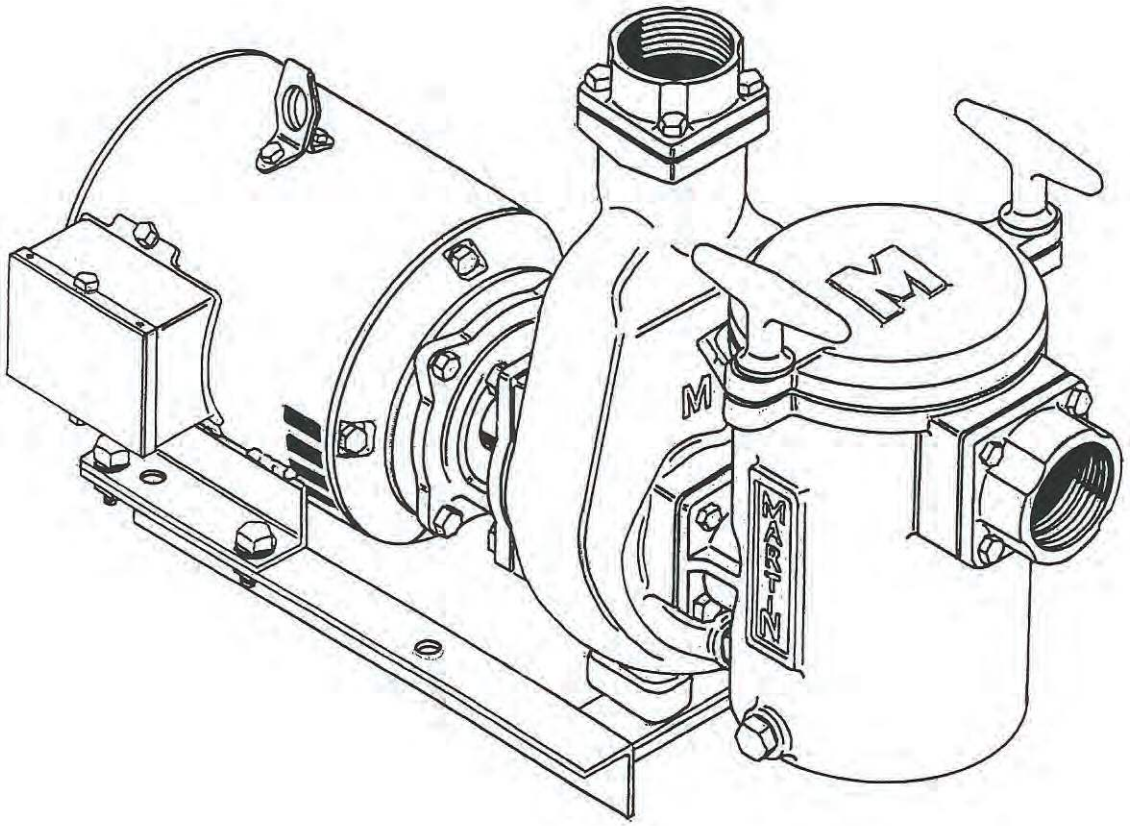

COMPLETE PUMP AND MOTOR

Val-Pak Part No.	Description
V40-535	3 Horsepower Pump & Motor, 60Hz, 1-Phase, 8” Trap
V40-536	3 Horsepower Pump & Motor, 60Hz, 3-Phase, 8” Trap
V40-537	5 Horsepower Pump & Motor, 60Hz, 1-Phase, 8” Trap
V40-538	5 Horsepower Pump & Motor, 50/60Hz, 3-Phase, 8” Trap
V40-539	7 1/2 Horsepower Pump & Motor, 50/60Hz, 3-Phase, 8” Trap
V40-530	10 Horsepower Pump & Motor, 50/60Hz, 3-Phase, 8” Trap

All 500 Series pumps are equipped with a 3” flanged inlet & outlet ports, and come with a stainless steel basket.

Viton Pump Seal available on request at an additional cost.

MARTIN 500 SERIES 3-10 HP BRASS PUMP EXPLODED VIEW

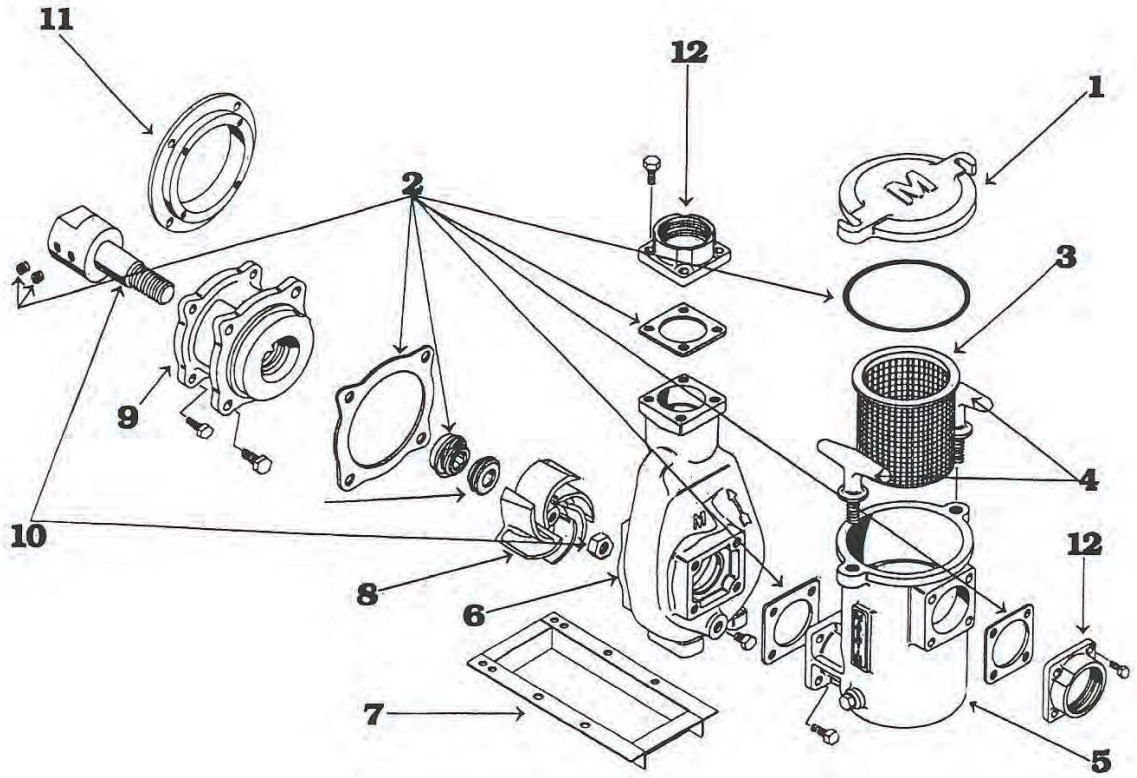

KEY NO.	PART DESCRIPTION	VAL-PAK #
1	8” Brass Pump Lid	V40-573
2	Parts Kit (inc. seal, gaskets, o-rings, set screws)	V40-576
3	8” Pump Basket	V40-574
4	Tee Handle, Bronze w/ S.S. Stud	V40-575
5	8” Brass Trap	V40-572
6	Brass Volute	V40-570
7	Angle Iron Base for 3, 5, & 7 1/2 HP Pump	V40-556
7	Angle Iron Base for 10 HP Pump	V40-557
8	3 Horsepower Impeller	V40-562
8	5 Horsepower Impeller	V40-563
8	7 1/2 Horsepower Impeller	V40-564
8	10 Horsepower Impeller	V40-565
9	3-10 Horsepower Brass Adapter	V40-561
10	Brass Pump Shaft w/ Nut and Setscrews	V30-559
11	Motor Adapter Ring (10 HP only)	V40-558
12	Brass Flange 3” NPT	V40-571
Not Shown	Bolt & Drain Plug Kit (inc 20 bolts, 2 brass plugs)	V40-555

005018-01

VIEW FROM OUTSIDE OF MOTOR AT SWITCH END.

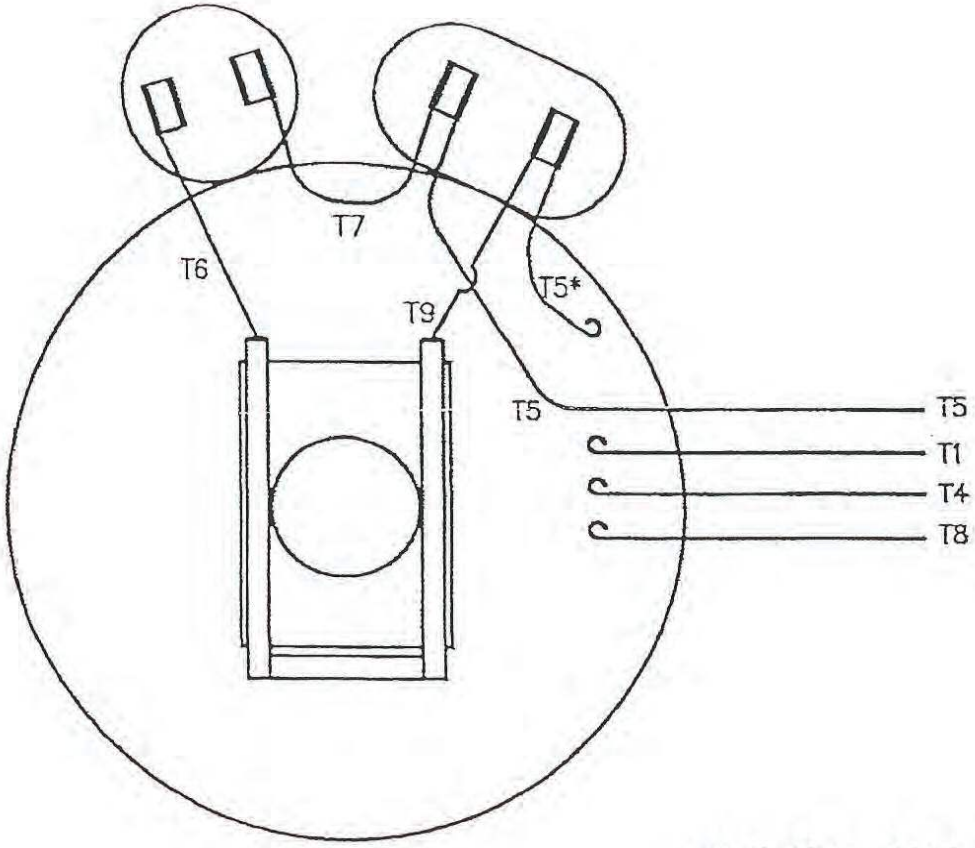

LINE LEADS

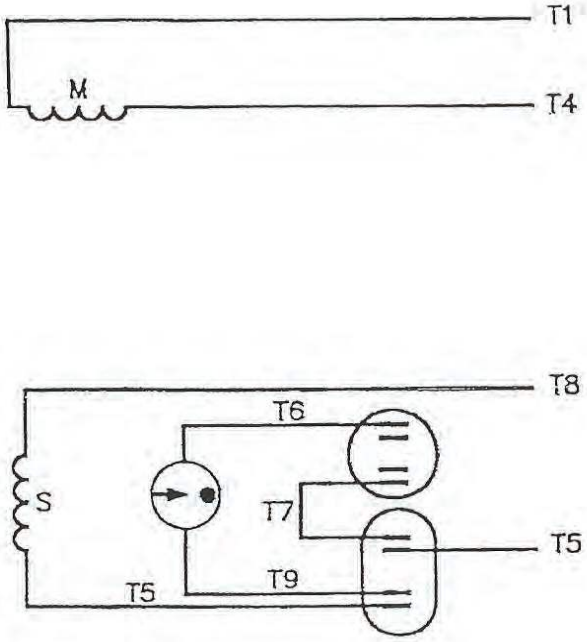

SINGLE PHASE WIRING DIAGRAM

ROTATION FACING LEAD END	L1	L2
C.C.W.	T1,T8	T4,T5
C.W.	T1,T5	T4,T8

* THIS LEAD MAY BE WHITE

REVISION	BY & DATE	CHK
ALTERNATE T5 LEAD MARKING WAS RED	RLW 7/22/02	KH
ADDED ALTERNATE T5 LEAD MARKING	RLW 5/31/02	KH
REDRAWN ON CAD	DBT 06/24/97	

TOLERANCES UNLESS SPECIFIED

DEC.	INCHES
.X	±.1
.XX	±.01
.XXX	±.005
.XXXX	±.0005
ANG	±1/2

LEESON ELECTRIC MOTORS GEARMOTORS AND DRIVES

TITLE: EXTERNAL WIRING DIAGRAM TYPE "K" W/O PROTECTOR

MAT'L. DECAL – 004018

FINISH

CAD FILE 00501801

RFP

DIST BRF-NLV

SIZE A

DRAWING NO. 005018-01

DRAWN ADH 02/19/

CHK WRK 02/20/7

APPD JCW 02/20/

SCALE 1=1

REF

FMF

PREV

00 .0-01

VIEW FROM OUTSIDE OF MOTOR AT SWITCH END.

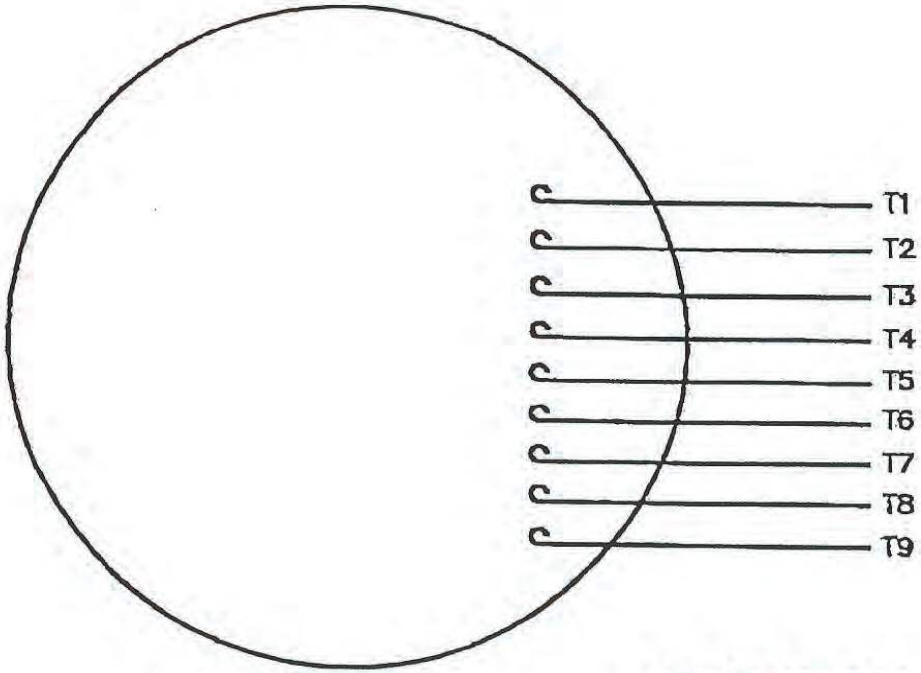

THREE PHASE
WIRING DIAGRAM

LINE LEADS

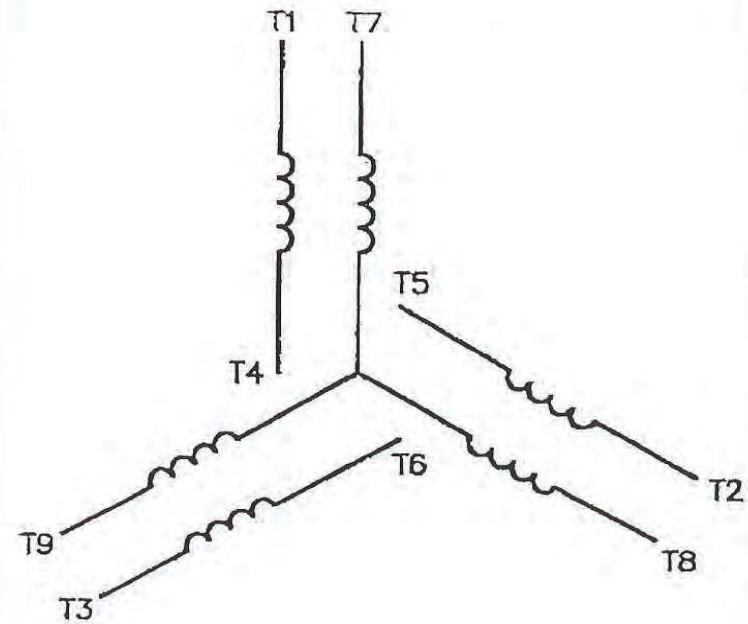

VOLTAGE	L1	L2	L3	JOIN & INSULATE
HIGH	T1	T2	T3	(T4,T7) (T5,T8) (T6,T9)
LOW	T1,T7	T2,T8	T3,T9	T4,T5,T6

			TOLERANCES UNLESS SPECIFIED	LEESON	ELECTRIC MOTORS GEARMOTORS AND DRIVES	DRAWN ADH 11/06/73
			DEC. INCHES			CHK
			X ±.1			APPD
			.XX ±.01	TITLE	EXTERNAL WIRING DIAGRAM 3 PHASE W/O PROTECTOR	SCALE 1=1
			.XXX ±.005			REF FIG.2-51
REDRAWN TO CURRENT STANDARDS	DBT 5/29/97		.XXXX ±.0005	MAT'L	DECAL – 004014	FMF
REVISION	BY & DATE	CHK	ANG ±1/2°	FINISH		PREV
		RFP	04/12/02	CAD FILE	00501001	SIZE A / DRAWING NO. 005010-01 / REV. 11
		DIST	BRF-NLV			

NOTE

When pump is mounted permanently within 5 feet of the inside walls of a swimming pool, you must use a No. 8 AWG or larger conductor to connct to bonding conductor lug.

WARNING

To reduce the risk of injury, do not permit children to use the product unless they are closely supervised.

CAUTION

This pump is for use with permanently installed pools and may also be used with hot tubs and spas if so marked. Do not use with storable pools. A permanently installed pool is constructed in or on the ground or in a building such that it cannot be readily disassembled for storage. A storage pool is constructed so that it may be readily disassembled for storage and reassembled to its' original integrity and has a maximum dimension of 18 feet (5.49m) and a maximum wall weight of of 42 inches (1.07m).

CAUTION

For hot tubs and spas pumps, do no install within an outer enclosure or beneath the skirt of a hot tub or spa unless so marked.

SECTION I: GENERAL INFORMATION

A) WIRING

WARNING
RISK OF ELECTRICAL SHOCK OR ELECTROCUTION

This pool pump must be installed by a licensed or certified electrician or a qualified pool serviceman in accordance with the National Electrical Code and all applicable local codes and ordinances. Improper installation will create an electrical hazard which could result in death or serious injury to pool users, installers, or others due to electrical shock, and may also cause damage to property. Always disconnect power to the pool pump at the circuit breaker before servicing the pump. Failure to do so could result in death or serious injury to serviceman, pool users or others due to electrical shock.

1. Make sure all electrical breakers and switches are turned off before wiring motor.

2. Make sure that the wiring voltage matches the motor voltage (230V or 460V). If they do not match, the motor will burn up.

3. Make sure all electrical connections are clear and tight.

4. Cut wires to the appropriate length so they don't overlap or touch when connected to the terminal board.

5. Permanently ground the motor using the green ground terminal located on the inside of the motor canopy or access plate. Use the correct wire size and type specified by the National Electrical Code. Make sure the ground wire is connected to an electrical service ground.

6. Bond the motor to the pool structure in accordance with the National Electrical Code. Use a solid No. 8 AWG or larger copper conductor. Run a wire from the external bonding to the pool bonding structure.

7. Connect the pump permanently to a circuit. Make sure no other lights or appliances are on the same circuit.

NOTE

It is important that the O-Ring be kept clean and well-lubricated. We recommend a silicone-based lubricant for best results.

B) THE PUMP STRAINER BASKET

This unit, sometimes referred to as the "Hair and Lint Pot", is the unit in front of the volute. Inside the chamber is the basket, which must be kept clean of leaves and debris at all times. Regardless of the length of time between filter cleaning, it is most important to visually inspect the hair and lint pot basket at least once a week. A dirty basket will reduce the efficiency of the filter and heater and also put an abnormal stress on the pump motor, which would result in a costly repair bill.

SECTION II: MAINTENANCE

WARNING

DO NOT open the strainer pot if pump fails to prime or if pump has been operating without water in the strainer pot. Pumps operated in these circumstances may experience a build up of vapor pressure and may contain scalding hot water. Opening the pump may cause personal injury. In order to avoid the possibility of personal injury, make sure that the suction and discharge valves are open and the strainer pot temperature is cool to touch, then open with extreme caution.

CAUTION

To prevent damage to the pump and the filter for proper operation of the system, clean pump strainer and skimmer basket regularly.

A) PUMP STRAINER BASKET CLEANING PROCEDURES

1. Turn off motor.
2. Relieve pressure in the system.
3. Turn the "T" handles in a counter-clockwise direction --- two turns.
4. Turn the pump lid away from the "T" handles and remove lid.
5. Put the debris from the basket into the trash and rinse out the basket. If the basket is cracked, it must be replaced.
6. Replace the basket and fill the pump pot and volute up to the inlet port with water.
7. Clean the pump lid, lid o-ring and sealing surface of the pump pot.
8. Re-install the pump lid by placing the lid on top of the pot and turn lid under the "T" bolts in a clockwise direction. Hand tighten "T" bolts evenly.
9. Turn the power "ON" at the house circuit breaker. Reset the pool time clock to the correct time. Start the pump.

WARNING

This filter operates under high pressure. When any part of the circulating system is serviced, air can enter the system and become pressurized. Pressurized air can cause the lid to blow off which can result in severe injury, death or property damage. To avoid this potential hazard, follow these instructions.

10. Open the manual air relief valve on top of the filter when pump starts to prime.
11. Stand clear of the filter.
12. Bleed Air from the filter until a steady stream of water comes out. Close the manual air relief valve

B) WINTERIZING

1. If the air temperature drops below 35º F, the water in the pump can freeze and cause damage. Freeze damage is not warrantable.
2. To prevent freeze damage, follow the procedures listed below:
   - A) Shut off electrical power for pump at the house circuit breaker.
   - B) Drain the water out of the pump case by removing the two 1/4" drain plugs from volute and trap. Store the plugs in the pump basket.
   - C) Cover the motor to protect it from severe rain, snow, and ice.
   - D) Do not wrap the motor in plastic. It will cause condensation and rust on the inside of the motor.

C) CARE OF ELECTRIC MOTOR

1. PROTECT FROM HEAT

   - A) Shade the motor from the sun.
   - B) Any enclosure must be well-ventilated to prevent overheating.
   - C) Provide ample cross ventilation.

2. PROTECT AGAINST DIRT

   - A) Protect from any foreign matter or splashing water.
   - B) Do not store (or spill) pool chemicals near the motor.
   - C) Avoid sweeping or stirring up dust near the motor while it is operating.
   - D) If a motor has eben damaged by dirt, warranty is voided.

3. PROTECT AGAINST MOISTURE

   - A) Protect from splashing pool water.
   - B) Protect from the weather.
   - C) Protect from lawn sprinklers.
   - D) If a motor has become wet, let dry before operating. Do not allow the pump to operate if it has been flooded.
   - E) If a motor has been damaged by water, warranty is voided.

SECTION III: SERVICE

WARNING

This pool pump must be installed by a licensed or certified electrician or a qualified pool serviceman in accordance with the National Electrical Code and all applical local codes and ordinances. Improper installation will create an electrical hazard which could result in death or serious injury to pool users, installers, or others due to eletrical shock, and may also cause damage to property. Always disconnect power to the pool pump at the circuit breaker before servicing the pump. Failure to do so could result in death or serious injury to serviceman, pool users, or others due to electrical shock. Read all servicing instructions before working on the pump.

WARNING

DO NOT open the strainer pot if pump fails to prime or if pump has been operating without water in the strainer pot. Pumps operated in these circumstances may experience a buildup of vapor pressure and may contain scalding hot water. Opening the pump may cause personal injury. In order to avoid the possibility of personal injury, make sure the suction and discharge valves are open and the strainer pot temperature is cool to touch, then open with extreme caution.

A) PUMP DISASSEMBLY

1. All moving parts are located in the rear sub-assembly of this pump.
   Tools required are as follows:
   - A) 1/8” Allen head wrench.
   - B) 1-5/8” open end wrench.
   - C) 9/16” open end wrench.
   - D) Impeller wrench.
   - E) 7/8” open end wrench.

2. To remove and repair the motor sub-assembly, perform the following procedures:
   - A) Turn off the pump circuit breaker at the main panel.
   - B) Remove the four bolts (with 9/16” wrench) that holds the bracket to the volute.
   - C) Gently pull the two pump halves apart, removing the rear sub-assembly.
   - D) Use 1-5/8” wrench to hold the pump shaft.
   - E) Place 7/8“ wrench on impeller nut. Turn wrench counter-clockwise to remove impeller lock nut from shaft.
   - F) Place impeller wrench in the vein of the impeller, turn impeller wrench counter-clockwise to unscrew impeller from shaft.
   - G) Remove four bolts from bracket to motor. Remove bracket from motor.
   - H) Remove three 1/4” set screws with 1/8” Allen wrench. Remove pump shaft from motor.
   - I) Remove old ceramic seal from impeller.
   - J) Place the bracket on a flat surface and tap out the spring/ceramic seal.

B) PUMP REASSEMBLY/SEAL REPLACEMENT

1. When installing the replacement shaft seal, carbon side up, use silicone sealant on the metal portion before pressing into the bracket.

.

2. Before installing the ceramic section of the seal into the impeller, be sure the impeller is clean. Use silicone sealant on side of rubber boot to seal the outer part of the seal to the impeller. Press the seal into the impeller with the ceramic side up with your thumbs and wipe off the ceramic and carbon faces with a clean cloth.

3. Reinstall pump shaft. Do not tighten set screws.

4. Remount bracket to the motor with four bolts using 9/16” wrench.

5. Reinstall the impeller with a 1-5/8” wrench. Hold the pump shaft, screw impeller onto shaft, turning it clockwise. Place 1-5/8” wrench on pump shaft flats. Tighten with impeller wrench or large screwdriver in impeller vanes.

6. Hold pump shaft with 1-5/8“ wrench. Hand-tighten lock nut onto pump shaft, complete tightening with 7/8” wrench.

7. Push impeller assembly up against the volute. Remove pump lid and basket. Take finger and place inside the trap housing pushing impeller back .015 of an inch (so it doesn't touch volute). Tighten three set screws on the pump shaft with 1/8" Allen wrench.

8. Spin shaft with fingers, shaft must be spin-free. If rubbing occurs, repeat step 7 and 8.

9. Fill trap and volute with water up to the inlet ports.

10. Reinstall basket and pump lid. Hand-tighten "T" bolts evenly.

11. Turn the power "ON" at the house circuit breaker. Reset the pool time clock to the correct time.

12. Start the pump. When the pump starts to prime, bleed air from the filter until steady stream of water starts to come out. Inspect pump seal and gasket for leaks.

THE MOTOR

Your pump is equipped with a permanently lubricated, maintenance-free, heavy duty, industrial quality motor engineered to withstand the toughest requirements of swimming pool applications.

PROTECTING THE MOTOR

The motor is designed to withstand the effects of rainfall. However, the following guidelines must be followed:

• Always disconnect from power supply before servicing.

• Use copper conductors which are wired for 220V (see wiring diagram to change to 110V).

• Test wires must be removed prior to permanent installation.

• Motor frame and adjacent metal must be grounded in compliance with electrical code. A solid copper bonding conductor, no smaller than No 8. AWG (8.4mm), should be connected from the accessible wire connector on the motor to all metal parts of the swimming pool, spa, or hot tub structure and to all electrical equipment, metal conduits, and metal piping within 5 feet (1.5m) of the inside walls of the swimming pool, spa, or hot tub when the motor is installed within 5 feet of the inside walls of the swimming pool, spa, or hot tub, or a fatal electrical shock may result.

• Do not flood the motor or submerge in water.

• Provide a minimum of 6” of cross-ventilation at all points.

• Keep the motor and surrounding area clean.

• Avoid sweeping or stirring dust near the motor while in operation.

• Avoid storing or spilling chemicals, powders, etc.

• Protect the motor against the weather.

• Position the motor slightly higher than the suction to allow drainage.

• Avoid splashing water or hosing the deck near the motor.

Failure to follow these instructions voids warranty.

OPERATION

Keeping the pump free of debris is essential to maintaining the unit’s long life. Clean the hair and lint trap basket frequently. A dirty basket will reduce the efficiency of both the filter and heater and will put abnormal stress on the pump’s motor resulting in expensive repairs and downtime.

WARNING: Never remove the hair and lint strainer while the pump is running or under pressure. When you do remove or tighten the lid, you can do so by hand as the lid is held in place by T-handles.

If only the liquid (wet) end is purchased, the impeller requires clearance of 15-17, thousandths.

TO CLEAN THE BASKET

1. Turn motor off.
2. Remove lid.
3. Remove basket and empty debris.
4. Replace basket and fill with water
5. Replace lid securely to prevent air from entering, and then tighten.
6. Turn motor on.
7. Open air-relief valve on the top of the filter until a steady steeam of water (free of air) comes out.

If the pump is installed below the water level of the pool, close the return and suction lines prior to opening the hair and lint trap. After cleaning, make sure you open the valves prior to operation.

PRIMING THE PUMP

During the pump's initial use, it must be primed. To prime the pump, remove the cover from the hair and lint trap, fill the pump and suction trap with water. Replace the cover, making sure the O-ring is in place, and tighten the T- handles evenly. The pump will now prime. The time it takes to complete priming depends on the lift and horizontal distance of suction piping.

RUNNING THE PUMP

Never run the pump dry. To safeguard against this, the proper water level must be maintained in the pool. If the water level falls below the skimmer intake, the pump will take in air, causing damage to the unit. Although the pump is equipped with a maintenance-free heavy duty mechanical seal, the warranty will be void should damage result from the unit running dry.

To preven freezing, drain all the liquid from the bottom of the pump using the plug at the bottom front section of the volute. It is recommended that a good rust inhibitor be applied into the liquid end to prevent corrosion. Be sure that the motor is kept dry and covered. In a cold climate, the pump and filter equipment should be run continuously to prevent freezing.

TROUBLESHOOTING

During operation, if the pump loses its' prime, or if too many bubbles come through the return line, you can likely correct the problem in one of the following ways:

- Make sure the hair and lint trap cover is tight and that the O-ring is in place.
- Check to ensure the valves on the suction and return lines are open and working properly.
- Make sure the pool water level is not too low.
- The filter pressure may be too high. If so, clean the filter.

If there is no power to the motor,

- Check the circuit breakers.
- Look for incorrect or loose wire connections.
- Determine if the thermal protector in the motor is tripped. If so allow the motor to cool and then try to restart it.

INSTALLATION

LOCATION

For optimum performance, the pump should be placed on a surface that is level and firm. The place you select should be close to the filter to ensure maximum convenience and easy serviceability. The pump does not need to be bolted down unless required by local code

PUMP CONNECTIONS

The suction line from the pool (skimmer and main train) must be connected to the inlet at the hair and link trap. The discharge line to the pool (return lines) must be connected to the outlet at the top of the pump via a filter.

WARNING: During the pressure test procedure, remember that the pump is actually under pressure. Do not loosen the T-handles while the pump is running until all pressure is released. Tighten the T-handles or latch them securely and the nraise the pressure slowly. Do not exceed 50 PSI.

Extreme caution should be taken during this pressure test. Failure to explicitly follow the guidelines above can result in personal injury.

Examine all wiring connections carefully. Connections must agree with incoming line voltage. Improper wiring can cause serious injuries and damage to the motor and result in a void of the warranty. For wiring instructions, see the wiring diagram on the motor label.

IMPORTANT SAFETY INSTRUCTIONS

When installing and using this electrical equipment, basic safety precautions should always be followed, including the following:

1. Read and follow **ALL** instructions.

2. **WARNING:** To reduce the risk of injury, do not permit children to use this product unless they are closely supervised at all times.

3. **CAUTION:** This pump is for use with permanently installed pools and may also be used with hot tubs and spas. Do not use with storable pools. A permanently installed pool is constructed in or on the ground or in a building such that it cannot be readily disassembled for storage. A storable pool is constructed so that it may readily be disassembled for storage and reassembled to its' original integrity.

4. Do not install within an outer enclosure or beneath the skirt of a spa unless so marked

5. SAVE THESE INSTRUCTIONS

If the motor is running with a lot of noise, you should check;

• The plumbing vibration

• The impeller, to see that turns free from any obstructions and that ti is properly adjusted.

• All motor bearings

WIRE INSTALLATION FOR THREE-PHASE MOTOR

Prior to operation, the rotation of the pump motor must be checked. Before water is introduced to th esystem, ensure that the pump is running in the correct direction by looking at the motor from the pump end or checking the arrow on the volute. The rotation should be counter-clockwise.

If the rotation is clockwise (backward) you need to switch any two of the three wires. This will change rotation to the proper direction.

Failure to follow these instructions could result in breakage or other damage to the impeller. This will void the warranty.

For replacement parts, please contact Val-Pak Products at 1-800-798-5123, via fax at 1-661-252-0117, or at info@val-pakproducts.com

FIELD SERVICE WARRANTY PROCEDURES:

Should your pump equipment fail, contact Val-Pak Products at 800-753-0509. Before you call, be prepared to complete and/or answer the following required information:

Customer Name: _____

Complete Address: _____

City and State: _____

Telephone Number: _____ Zip Code: _____

Model Number: _____ Serial Number: _____

Installation Date: _____

Complete description of the problem:

_____

_____

_____

Val-Pak will contact an authorized service center in that area. The service center will contact the customer and set up an appointment to evaluate the problem. Should your firm contact a service center directly, the service center will also require the above information. The center will then contact Val-Pak Products for a service authorization number before the service is initiated.

To expedite your request for service and ensure that the service center has the correct parts to make the necessary repairs, be certain that all the information provided is complete and accurate. Incomplete or incorrect information regarding the service agreement can delay the repair or process time.

If our service center determines the problem is not covered under warranty, it will deal directly with the homeowner. The homeowner will be responsible for the parts and labor at that time.

Val-Pak Products is open, Monday through Friday, 8:00am - 4:30pm Pacific, and may be reached by calling 1-661-252-0115 or by fax at 1-661-252-0117.

WARRANTY

Val-Pak warrants its products to be free from defects in material and workmanship for a period of one (1) year from the date of purchase, except as noted below. Product which becomes defective within the warranty period will be repaired or replaced (at Val-Pak's option) except for damage related to whater chemistry, negligence, abuse, misuse, misapplication, unauthorized modifications, improper installation, normal wear, or chemical attack. This warranty extends only the original purchaser. Pump seals, pump motors, O-rings, and gaskets are covered only during the first year. The removal and/or tampering with any labels on Val-Pak products will void the warranty.

Val-Pak will be responsible for the labor incurred by its' authorized service agents in removing, inspecting, and reinstalling the warranty products only during the first year of the warranty period. Val-Pak will not be responsible for labor costs of anyone who is not an authorized service agent or for routine maintenance, adjustments, or alterations to electrical calibrations.

Any products which are claimed to be defective and whcih are not repaired or replaced by an authorized service agent must be shipped freight prepaid to Val-Pak and the repaired or replaced product will be returned to the sender freight collect. When sent to Val-Pak, the product must be accompanied by the sales receipt or other proof of purchase date, as well as the sender's name, mailing address, daytime phone number, and any other information relating to the sender's claim.

Unless state law expressly provides otherwise. Val-Pak will only be responsible for the repair or replacement of its' products that are found to be defective as provided above, and will not bear the cost of any incidental or consequential damages. The warranty gives you specific legal rights and you may also have rights, which vary from state to state.

Val-Pak is not responsible for warranty on pump mechanical seal or motor when purchasing a pump liquid end only (brass pump less motor).